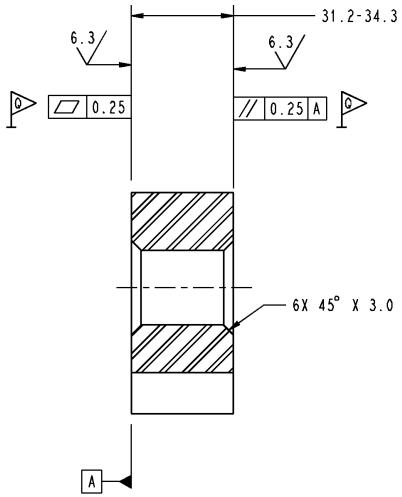

SECTION A-A

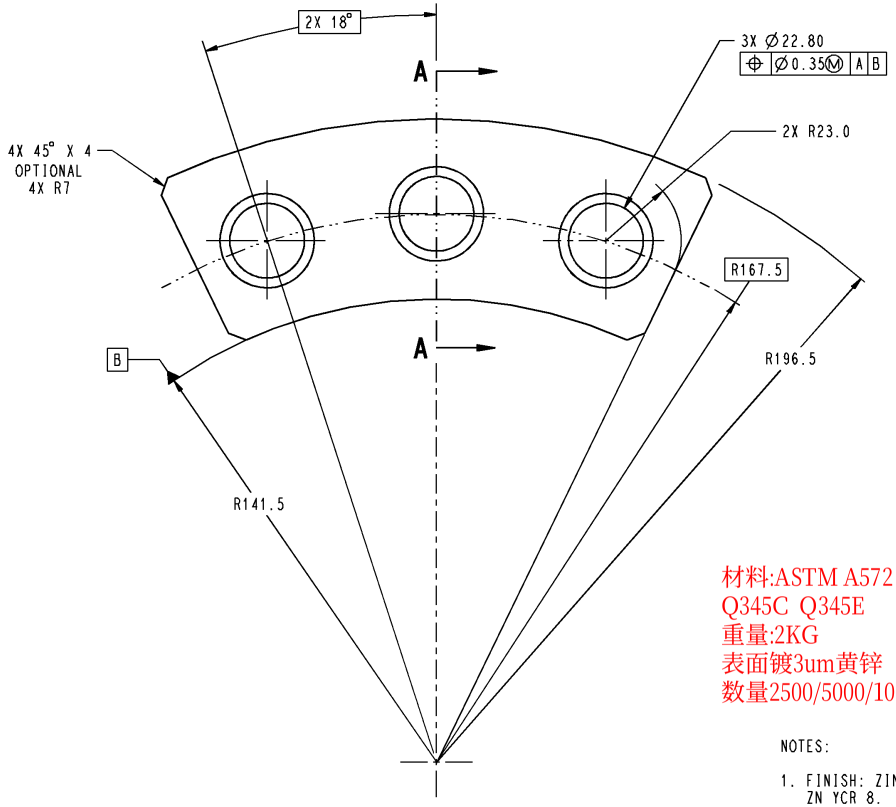

材料:ASTM A572 GRADE 50
Q345C Q345E
重量:2KG
表面镀3um黄锌
数量2500/5000/10000件

NOTES:

1. FINISH: ZINC PLATE, CNH MAT0310, ZN YCR 8.
2. MUST BE FREE OF BURRS

INDICATES AN IMPORTANT CHARACTERISTIC REQUIRING COMPLIANCE WITH 86620212 (ENS0301)

DWGB105 GENERAL TOLERANCES	
X	±1.5
X.X	±0.8
X.XX	±0.25
∠	±2°
MACHINED SURFACE ROUGHNESS MAX.	6.3

STD. NO.	DESCRIPTION
86513728	STD SHOP PRAC GUIDE

APPLICABLE STANDARDS

ECO	REV	CHANGES	BY	DATE
35031613	F	SEE SHEET 2	W SORENSON	09OCT06
35028119	E	ADDED SC FLAGS, WAS CNHO	W SORENSON	24JUL06
35023415	D	SEE SHEET 2	T BURGESS	11MAY06
	C3	SEE SHEET 2 REV CHG TO MATCH EC	T BURGESS	11MAY06
	C2	SEE SHEET 2	T BURGESS	05MAY06
	C1	ADDED SHEET 2 (FORGE OPTION)	T BURGESS	05MAY06
	B	REV CHANGE TO MATCH EC	T BURGESS	05MAY06
	B2	ADDED (M22.32mm) TO PART DESCRIPTION	T BURGESS	03FEB06
	B1	FORGING CORNER RADII 3 MAX WAS 1.6 MAX (1B)	T BURGESS	03FEB06
35017455	A	RELEASED TO PRODUCTION	W SORENSON	22DEC05

DRAWN BY 20JAN04 T. BURGESS
CHECKED BY 21JAN04 G. BUTKOVICH
MATERIAL BY 21JAN04 D. DOBBINS
APPROVED BY 21JAN04 G. BUTKOVICH

THE INFORMATION HEREON IS CONFIDENTIAL AND PROPRIETARY PROPERTY OF CNH GLOBAL N.V. AND/OR ITS SUBSIDIARIES. ANY USE, EXCEPT THAT FOR WHICH IT MAY BE LOANED, IS PROHIBITED.

METRIC
UNLESS OTHERWISE SPECIFIED, ALL DIMENSIONS ARE IN MILLIMETRES SURFACE FINISH IN MICRONETRES Ra
GENERAL TOLERANCES PER CNH DRAWING STANDARD DWGB105
GEOMETRIC DIMENSIONING AND TOLERANCING PRACTICES SHALL CONFORM TO CNH DRAWING STANDARD DWGB100
DESIGN HARD METRIC [X] SOFT METRIC [ ]
[ ] FIRST ANGLE PROJ.
[X] THIRD ANGLE PROJ.

LEXICON CODE | REFERENCE PART 87283501 | BOPENGEBES NONE | PART STATUS
CNH MATERIAL HSLA HR PLATE, CNH MAT1025, GRADE A | MATL.SIZE
LOCAL MATERIAL HR PLATE, ASTM A572, GRADE 50
APPROX MASS 2.0 kg | ENGRG CONT HI | MODEL 2300 | DWG SCALE 1:1 | DOCUMENT NONEBBB.
LOCAL DESCRIPTION | SECT OF
DESCRIPTION PLATE, WHEEL MOUNTING SPACER (M22,32mm) | SIZE / SYS A2/PRO | SHT 1 OF 2
SC CLASS CNH1 | CRITICAL/TOTAL SC'S 0/2 | PART NUMBER 87327940

MOD REV F

CAGE CODE: 10988 | CLASS NO. | DWG REV. F

87327940

NAME:AB525 OBJECT:87327940_1 DATE:17-Oct-06 14:47:33

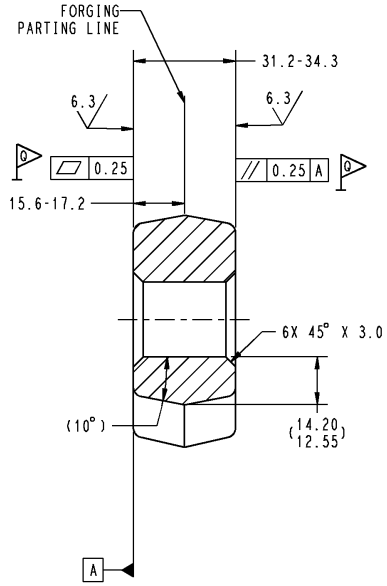

SECTION A-A

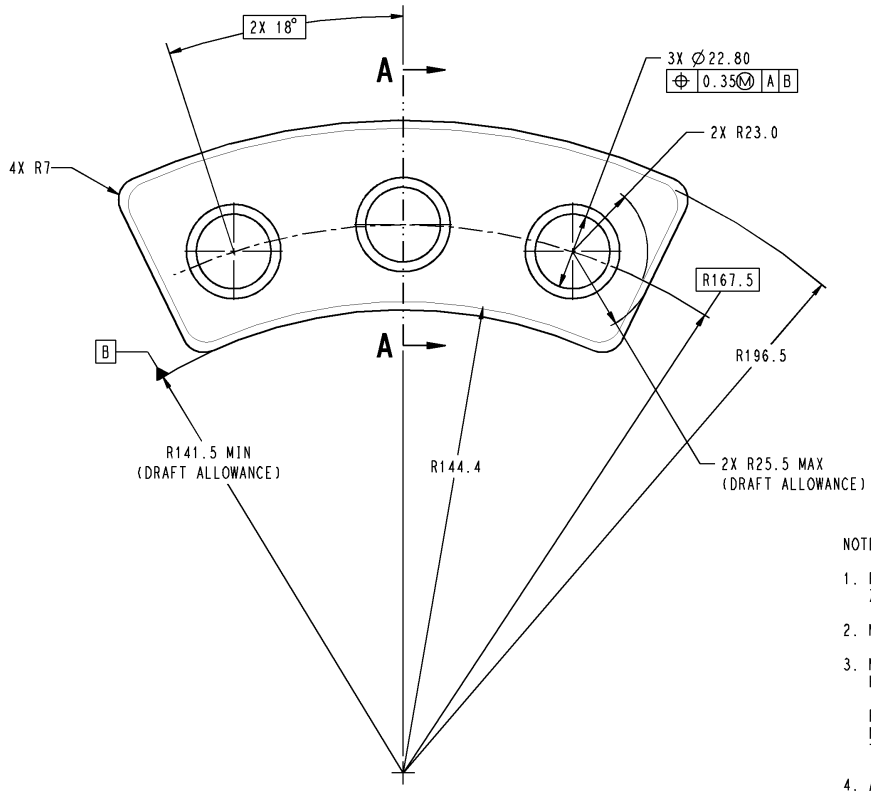

NOTES:

1. FINISH: ZINC PLATE, CNH MAT0310, ZN YCR 8.
2. MUST BE FREE OF BURRS
3. MATERIAL AND PROCESS
   H.R. BAR, ASTM A576, GRADE 1040 OR 1045

   FORGE
   NORMALIZE PER CASE SPECIFICATION P-4
   TO 170 HB MIN.
4. ALL FORGING DRAFT ANGLES 7°
   UNLESS OTHERWISE SPECIFIED.
5. ALL FORGING CORNER RADII 3 MAX
   UNLESS OTHERWISE SPECIFIED.

INDICATES AN IMPORTANT CHARACTERISTIC
REQUIRING COMPLIANCE WITH 86620212 (ENS0301)

FORGE OPTION

DWGB105 GENERAL TOLERANCES	
X	±1.5
X.X	±0.8
X.XX	±0.25
∠	±2°
MACHINED SURFACE ROUGHNESS MAX.	6.3

APPLICABLE STANDARDS	
86513728	STD SHOP PRAC GUIDE
STD. NO.	DESCRIPTION

ECO	REV	CHANGES	BY	DATE
35031613	F	ADDED REF. DIMENSIONS TO SECTION A-A	W. SORENSON	09OCT06
	F	B DATUM WAS ON R144.4	W. SORENSON	09OCT06
35028119	E	ADDED SC FLAGS, WAS CNHO	W. SORENSON	24JUL06
35023415	D	R196.5 DIM WAS TO OUTSIDE (3D)	T.BURGESS	11MAY06
	C3	ADDED R 141.5 MIN (3D) REV CHG TO MATCH EC	T.BURGESS	05MAY06
	C2	R144.4 WAS R141.5 (5D)	T.BURGESS	05MAY06
	C1	SEE SHEET 1	T.BURGESS	05MAY06

DRAWN BY	T. BURGESS	20JAN04
CHECKED BY	G. BUTKOVICH	21JAN04
MATERIAL BY	D. DOBBINS	21JAN04
APPROVED BY	G. BUTKOVICH	21JAN04

METRIC
UNLESS OTHERWISE SPECIFIED, ALL DIMENSIONS ARE IN MILLIMETRES SURFACE FINISH IN MICRONETRES Ra
GENERAL TOLERANCES PER CNH DRAWING STANDARD DWGB105

THE INFORMATION HEREON IS CONFIDENTIAL AND PROPRIETARY PROPERTY OF CNH GLOBAL N.V. AND/OR ITS SUBSIDIARIES. ANY USE, EXCEPT THAT FOR WHICH IT MAY BE LOANED, IS PROHIBITED.

GEOMETRIC DIMENSIONING AND TOLERANCING PRACTICES SHALL CONFORM TO CNH DRAWING STANDARD DWGB100

DESIGN HARD METRIC [X] SOFT METRIC [ ]
[ ] FIRST ANGLE PROJ.
[X] THIRD ANGLE PROJ.

LEXICON CODE	REFERENCE PART 87283501	REPLACES		PART STATUS
CNH MATERIAL SEE NOTES				MATL SIZE
LOCAL MATERIAL SEE NOTES				
APPROX MASS 2.0 kg	ENGRG CONT HI	MODEL 2300	DWG SCALE 1:1	DOC NO.- HOM NO.
LOCAL DESCRIPTION				SECT OF
DESCRIPTION PLATE, WHEEL MOUNTING SPACER (M22,32mm)			SIZE / SYS A2/PRO	SHT 2 OF 2
		SC CLASS CNH1	CRITICAL/ TOTAL SC'S 0/2	PART NUMBER 87327940

MOD REV F

87327940

CAGE CODE: 10988 | CLASS NO. | DWG REV. F

NAME:AB525 OBJECT:87327940_2 DATE:17-Oct-06 14:47:37